CONSTRUCTION NOTES

1. Reduced pressure backflow prevention assembly (see Note a and b).
2. Brass union required if threaded fittings (elbows) are used.
3. Install backflow prevention assembly enclosure per manufacturer's recommendations (see Note a and b). List of approved enclosures will be provided by the City.
4. Concrete pad, Class 520-C-2500. Concrete pad must be constructed to ensure 12" clearance around the backflow enclosure.

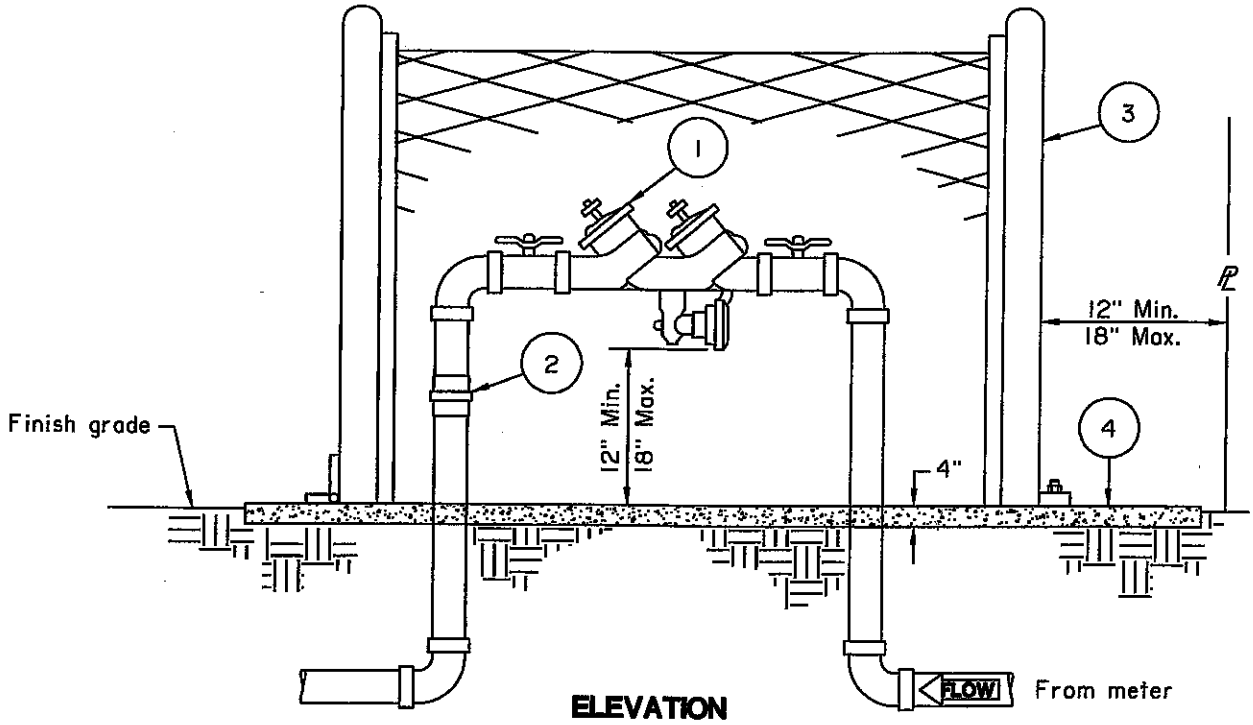

ELEVATION

NOTES:

a. See Section 3 of these Specifications regarding approved backflow assemblies, backflow enclosures, testing requirements, placement of backflow assemblies, and other requirements.

b. Proposed location of the backflow device, protective enclosure and all parts must be approved by the Engineer prior to installation. Faliure to comply may result in project delays to correct all unacceptable/ unapproved work.

c. All fittings and pipe shall be brass or copper with either IPT or soldered connections, respectively.

d. A wye strainer or hose bibb is not allowed to be installed on backflow assembly piping.

e. A pressure reducer, if required, is only permitted at the building and not on the backflow assembly.

f. There shall be no connections between the meter and the backflow assembly.

g. Final placement of the backflow enclosure must be at least 12" behind the Public right-of-way and 12" clear of walls, buildings, obstructions or other devices. Backflow enclosure shall be manufacturer's forest green color or painted to meet City painting standards (see Section 5-10 of these Specifications for field painting).

REVISED	CITY OF FULLERTON ENGINEERING DEPARTMENT	DRAWN E.C.W.
DATE 2-15-07 9-17-07	3/4" THROUGH 2 1/2" REDUCED PRESSURE BACKFLOW PREVENTION ASSEMBLY	DATE 12-1-00
	APPROVED D R Hoff DIRECTOR OF ENGINEERING DATE 2-1-08	STD. NO. 604