TYPICAL PATIO COVER

K

CITY OF FULLERTON

COMMUNITY DEVELOPMENT DEPARTMENT

303 W. COMMONWEALTH AVENUE
FULLERTON CA 92832
(714) 738-6541

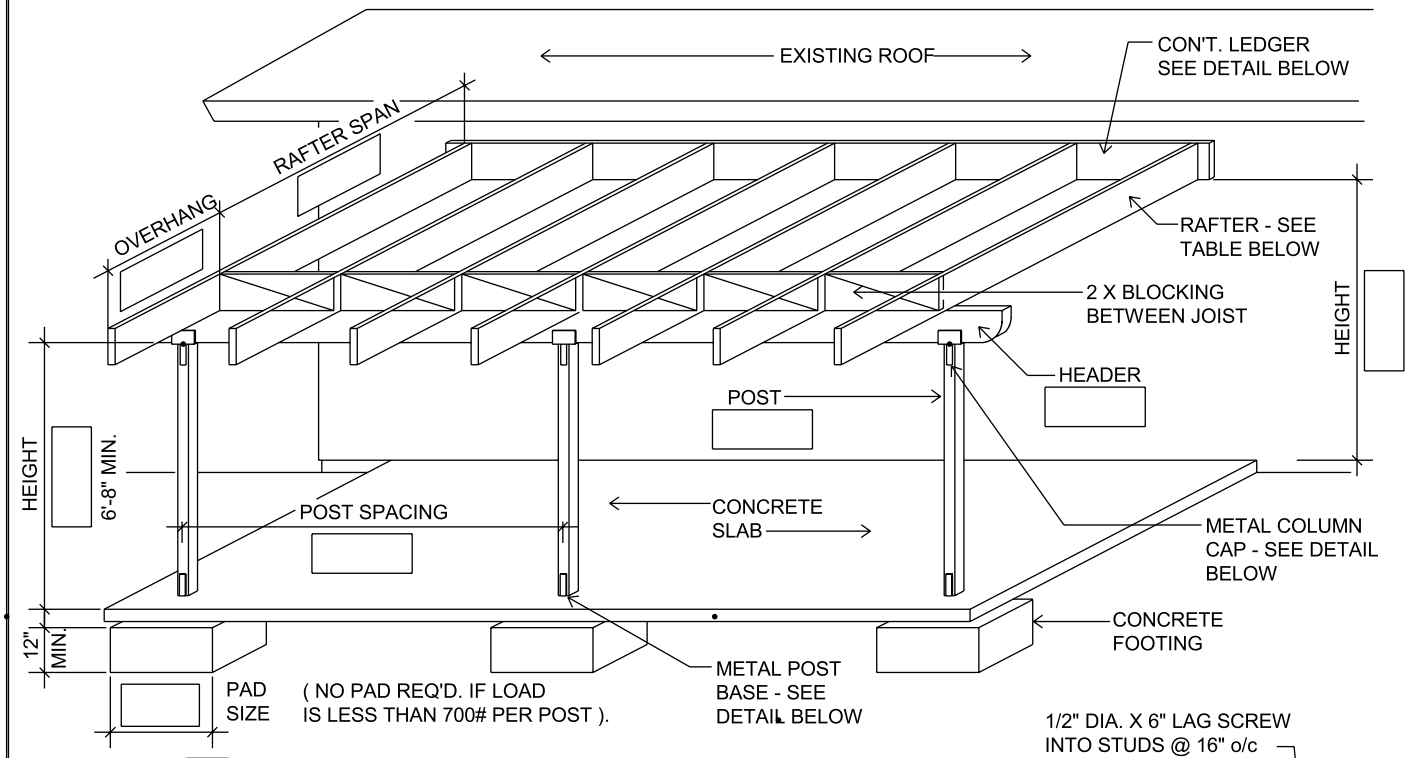

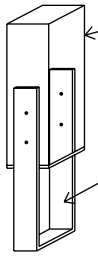

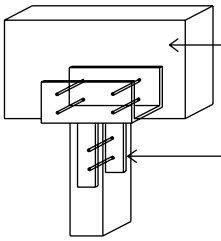

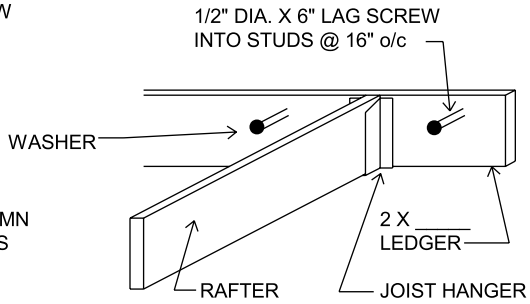

RAFTERS			HEADER		SHEATHING	
SIZE	SPACING	SPAN	SIZE	SPAN	SIZE	SPAN
2 X 6 D.F. #2	12"	16'-6"	13'-0" MAX. RAFTER SPAN		1" SHIPLAP	30"
	16"	14'-6"	4 X 4	6'-0"	1" T & G	36"
	24"	12'-0"	4 X 6	9'-0"		
	32"	10'-6"	4 X 8	12'-0"	GRADE CC EXTERIOR PLYWOOD	
2 X 8 D.F. #2	16"	19'-0"	OVER 13'-0" RAFTER SPAN		3/8" UNBLOCKED	16"
	24"	15'-6"	4 X 6	7'-0"	3/8" BLOCKED	24"
	32"	13'-6"	4 X 8	10'-0"	1/2" UNBLOCKED	24"
			4 X 10	12'-0"	1/2" BLOCKED	32"